CPU

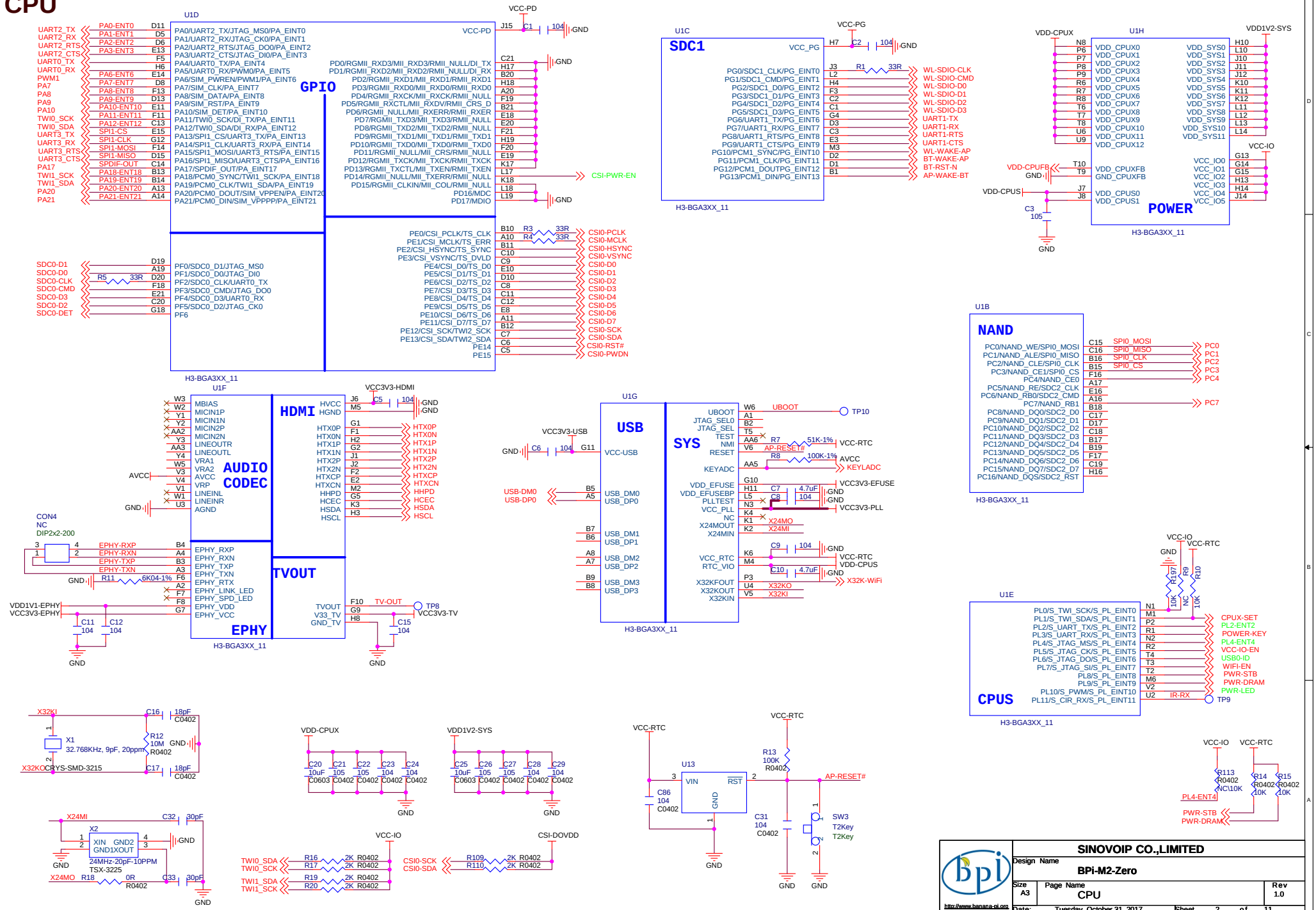

SINOVOIP CO.,LIMITED	
Design Name: BPi-M2-Zero	
Size: A3	Page Name: CPU
Rev: 1.0	
Date: Tuesday, October 31, 2017	Sheet 2 of 11

http://www.banana-pi.org